PARAPET DETAIL–

JOIST PARALLEL TO WALL

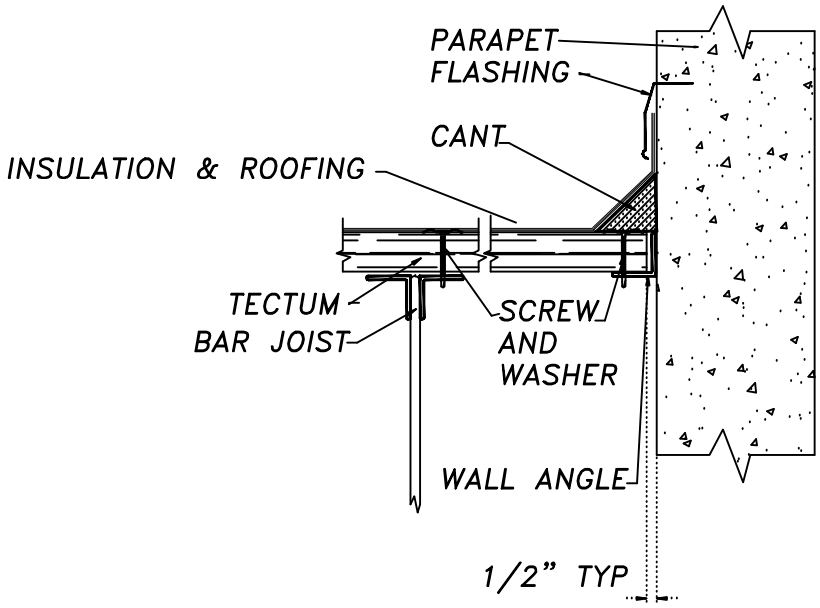

PARAPET DETAIL–
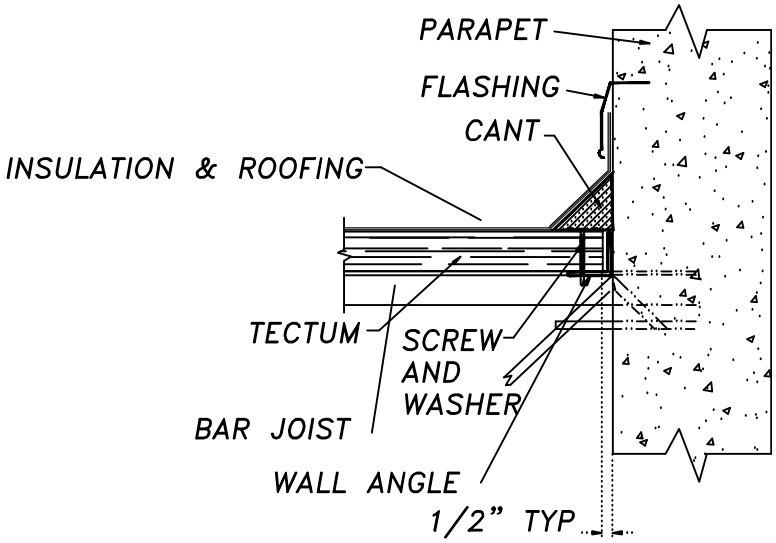
JOIST RIGHT ANGLE TO WALL